3 x 3 M

YS 5030

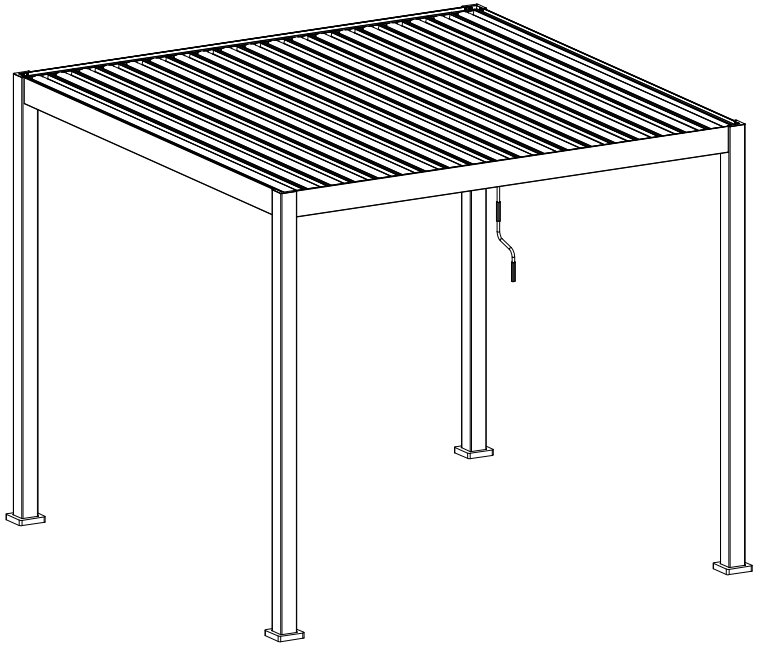

At least need 3person work together

REQUIRED TOOLS



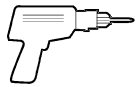



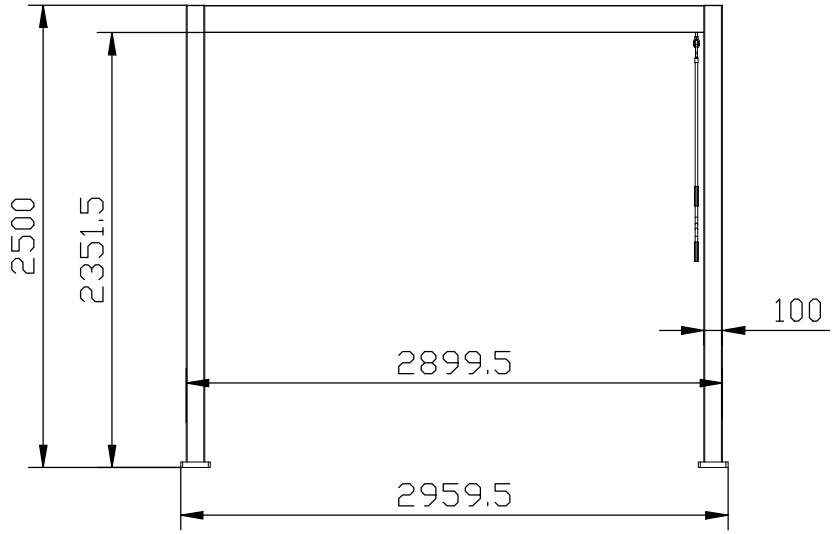

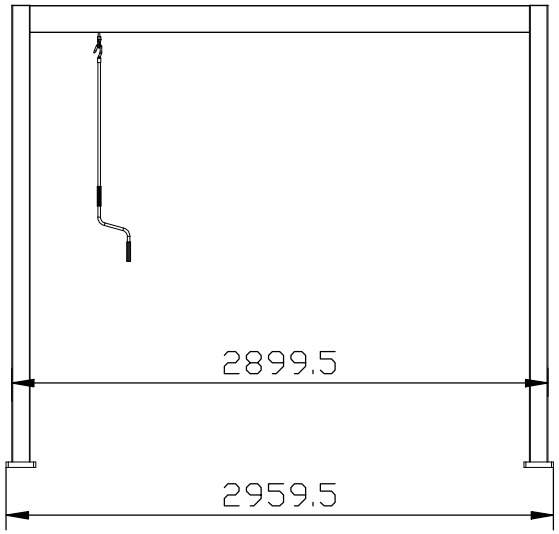

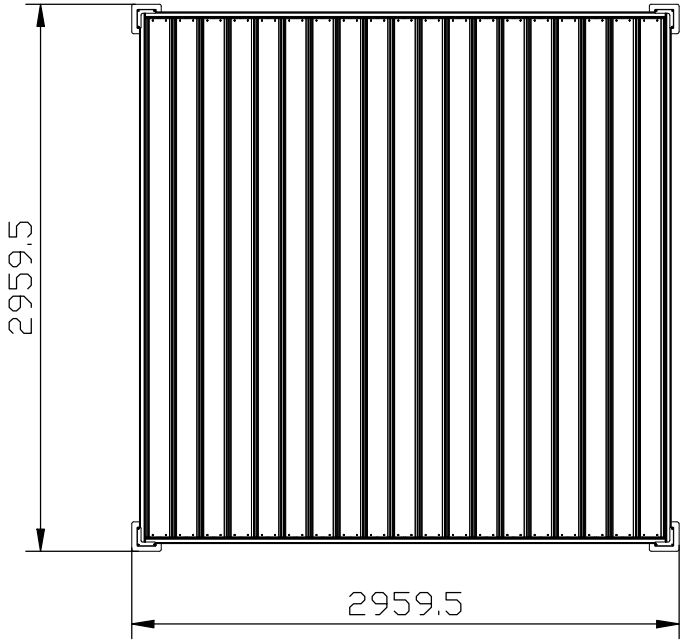

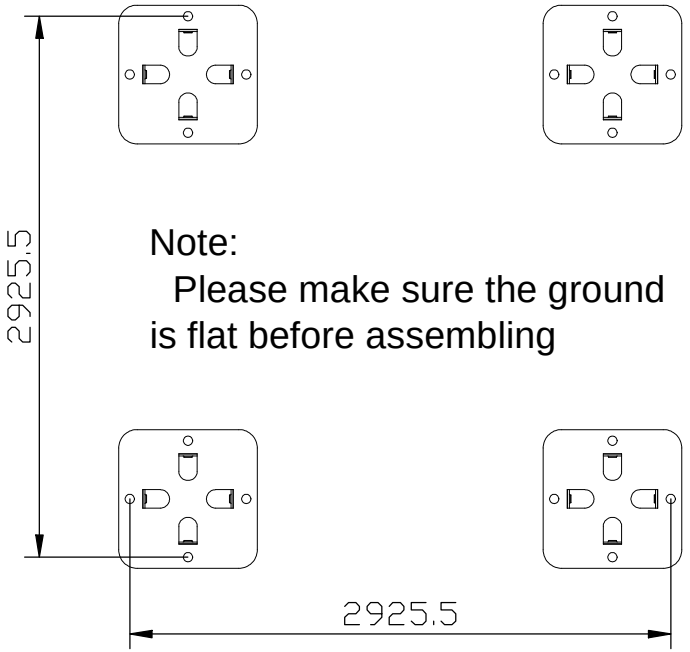

Note:
Please make sure the ground is flat before assembling

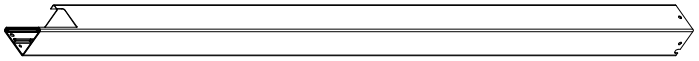

A x4



B1 x1



B2 x1



B3 x1



B4 x1



D x1



D1 x1



F1 x1



F x1

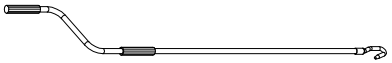

L x1



Q x18



Q1 x1

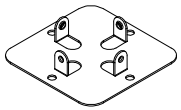

J x4

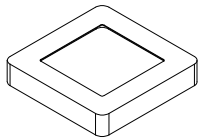

J1 x4

J2 x4 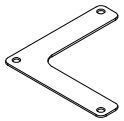	M x1 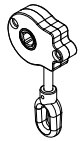	M1 x1 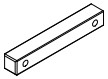	V1 x1 
V2 x1 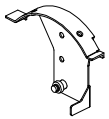	W x1 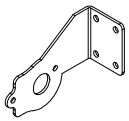		
1 x24 M6x15 	2 x2 M6x30 	3 x78 M5x10 	4 x8 ST5.5x16 
5 x2 M5x15 	6 x36 M6x37 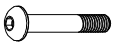	x1 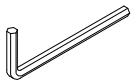	
		x1 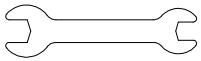	

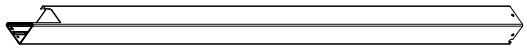

A x4

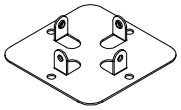

J x4

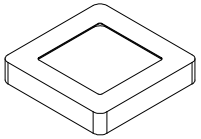

J1 x4



M6x15

1 x16

<1>

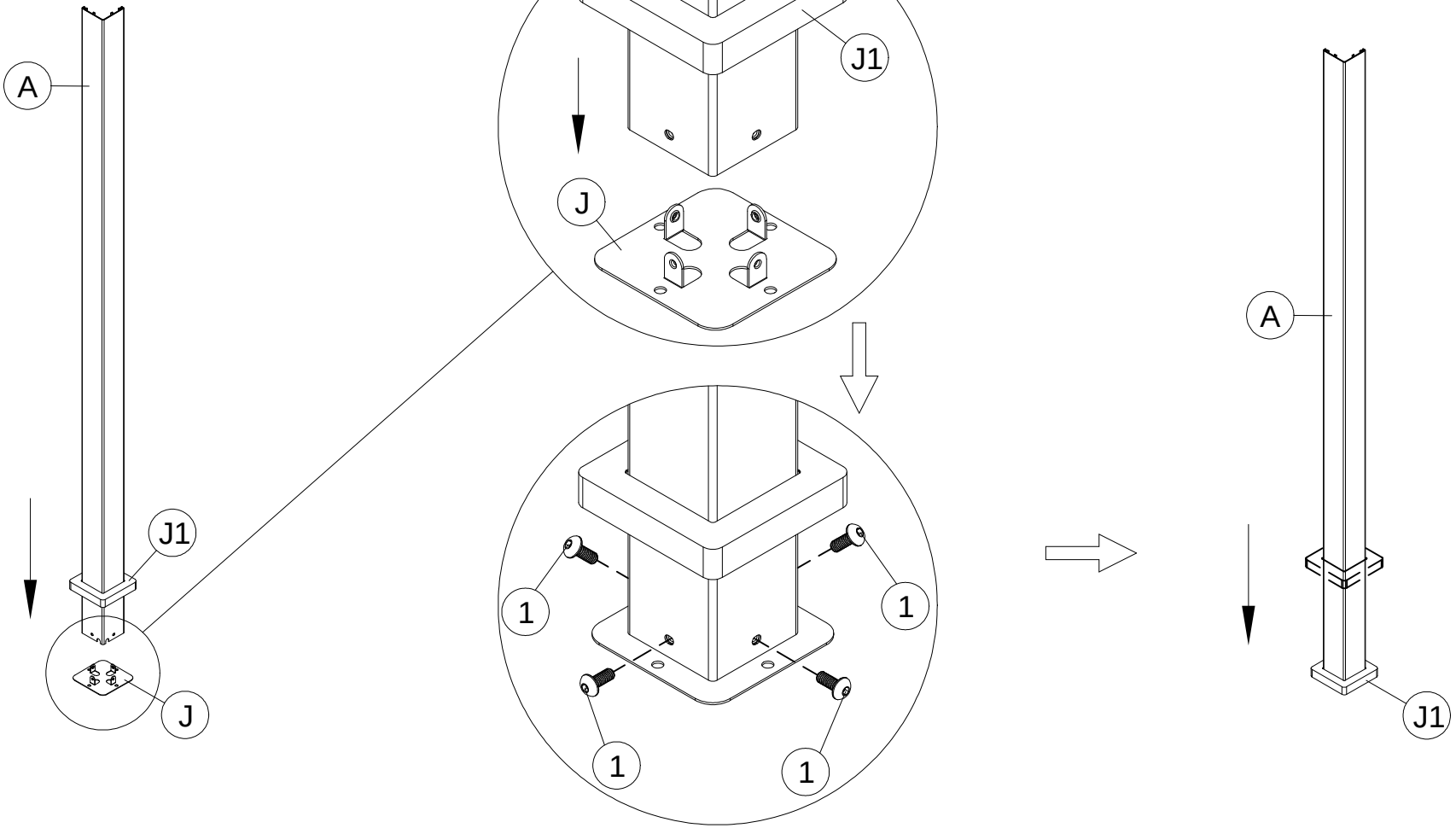

		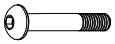
B2 x1	D x1	M6x37 6 x18

<2>

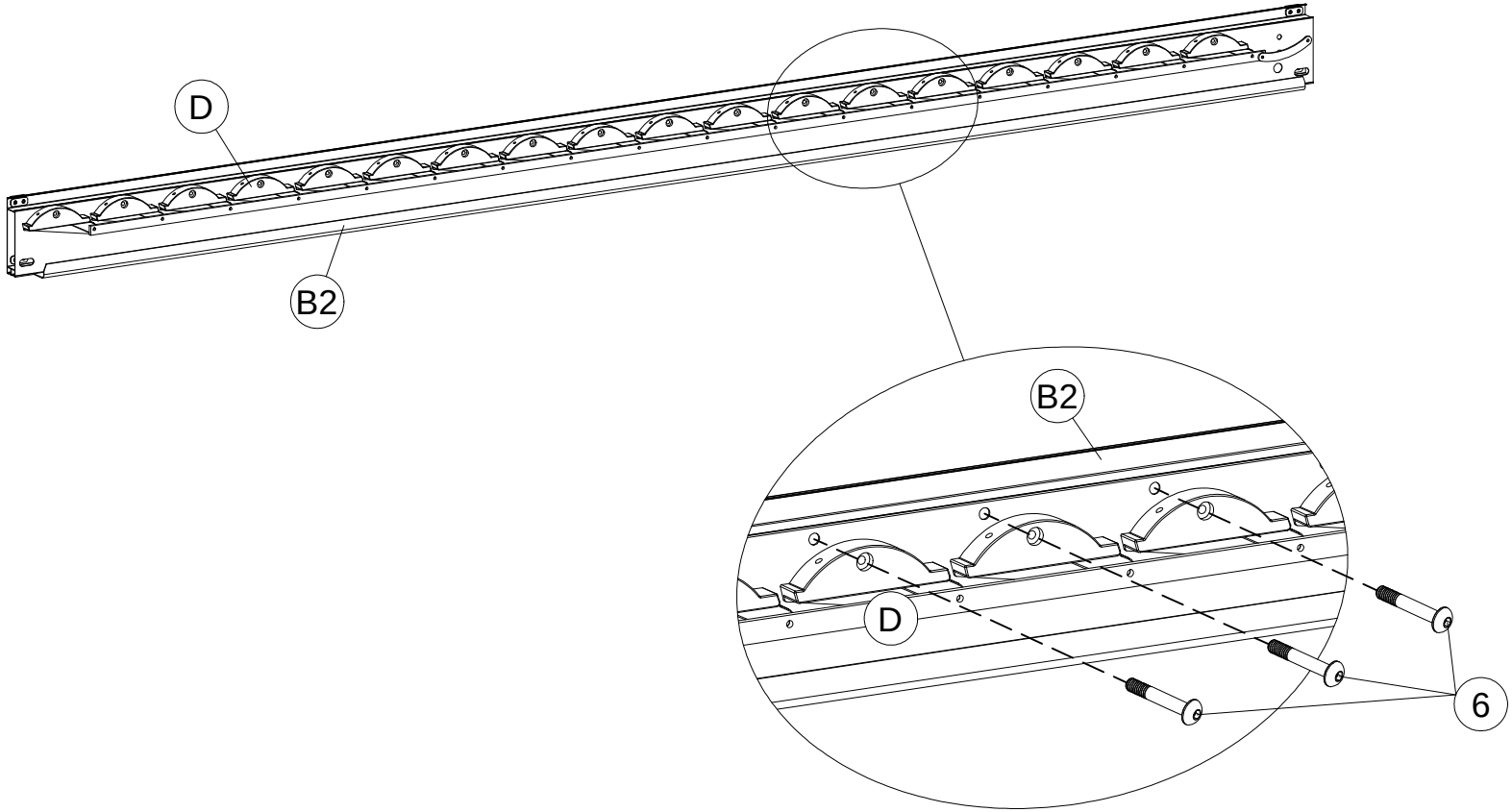

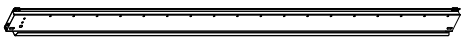		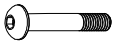
B4 x1	D1 x1	M6x37 6 x18

<3>

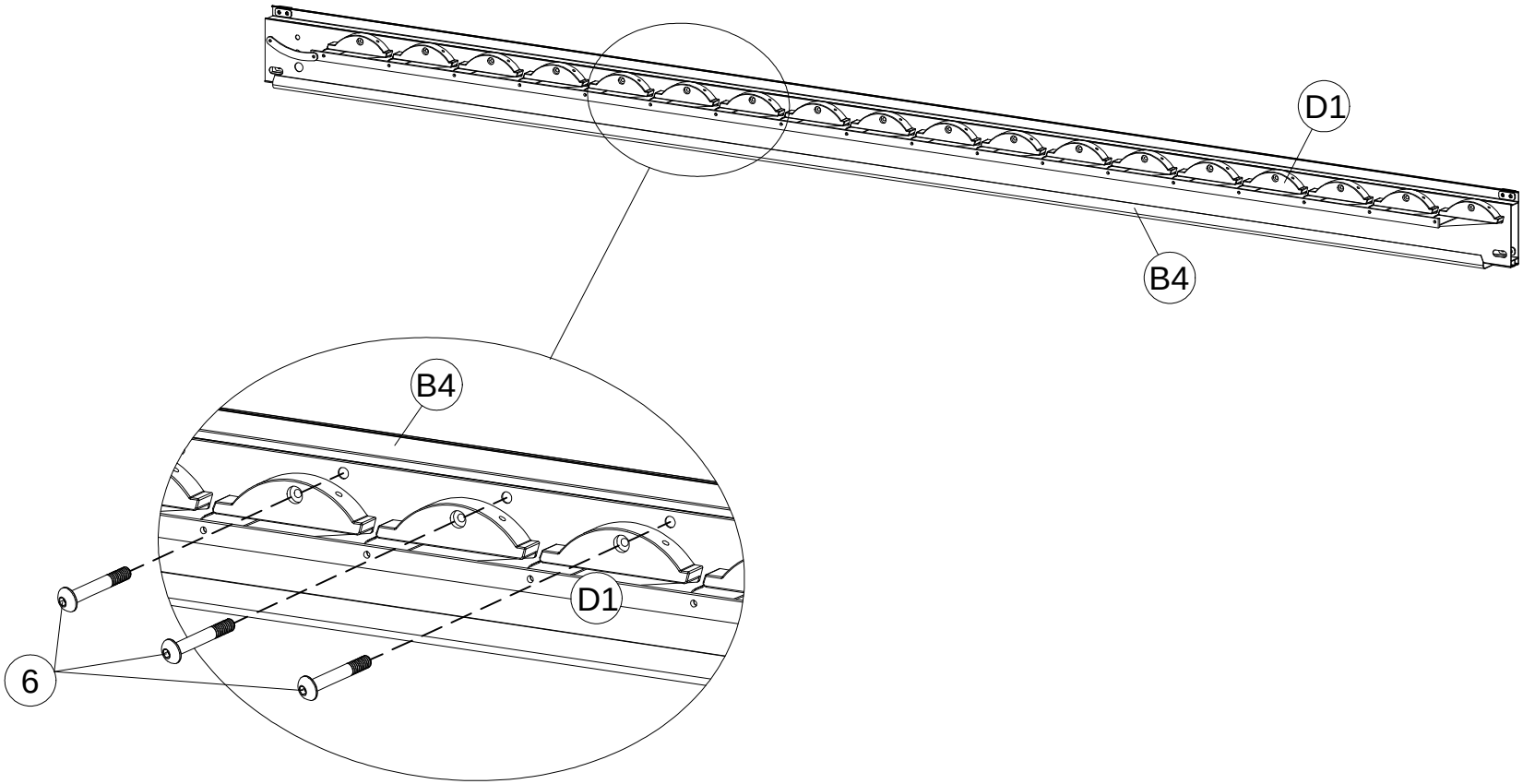



B1 x1

<4>

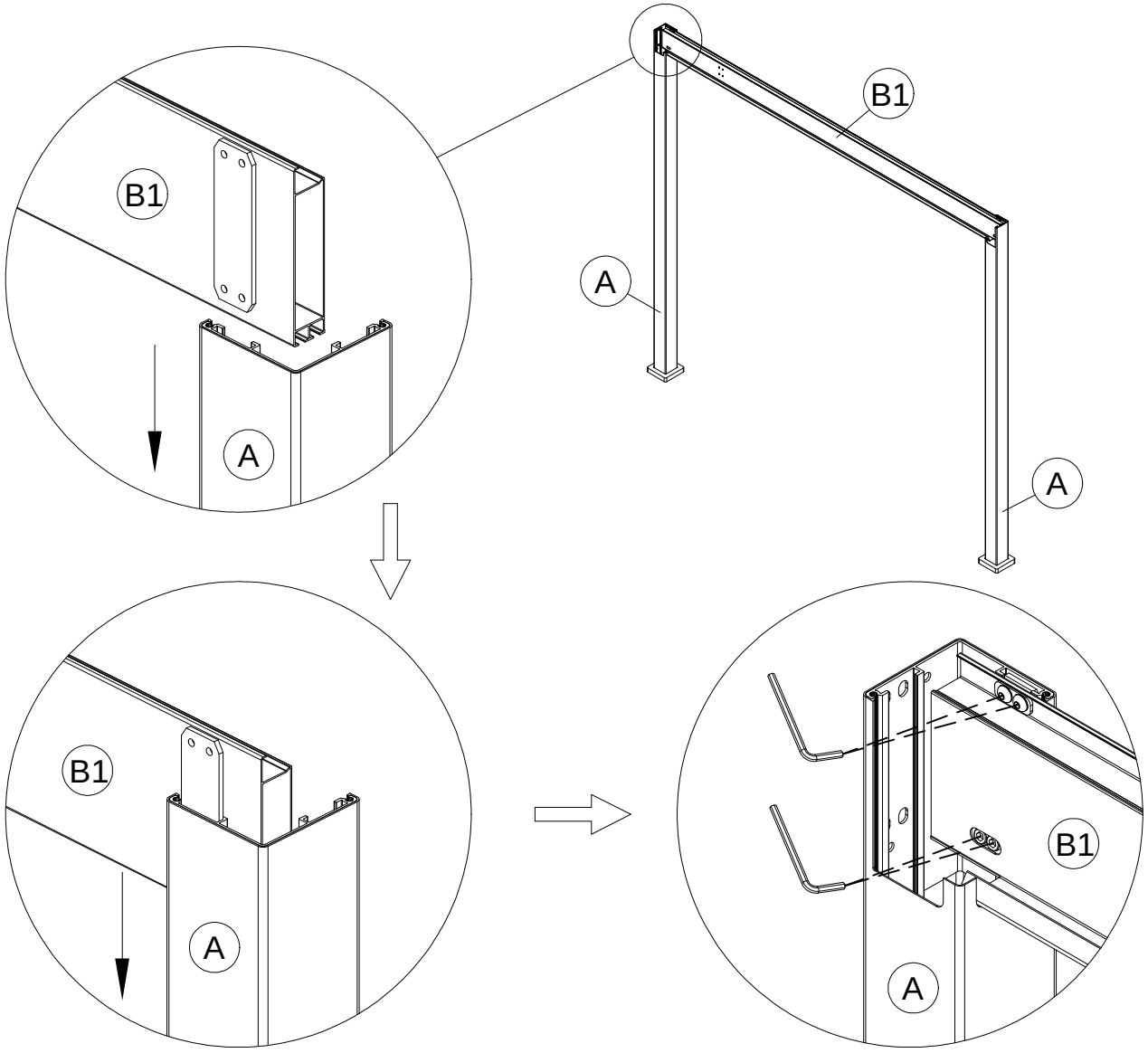



B3 x1

<5>

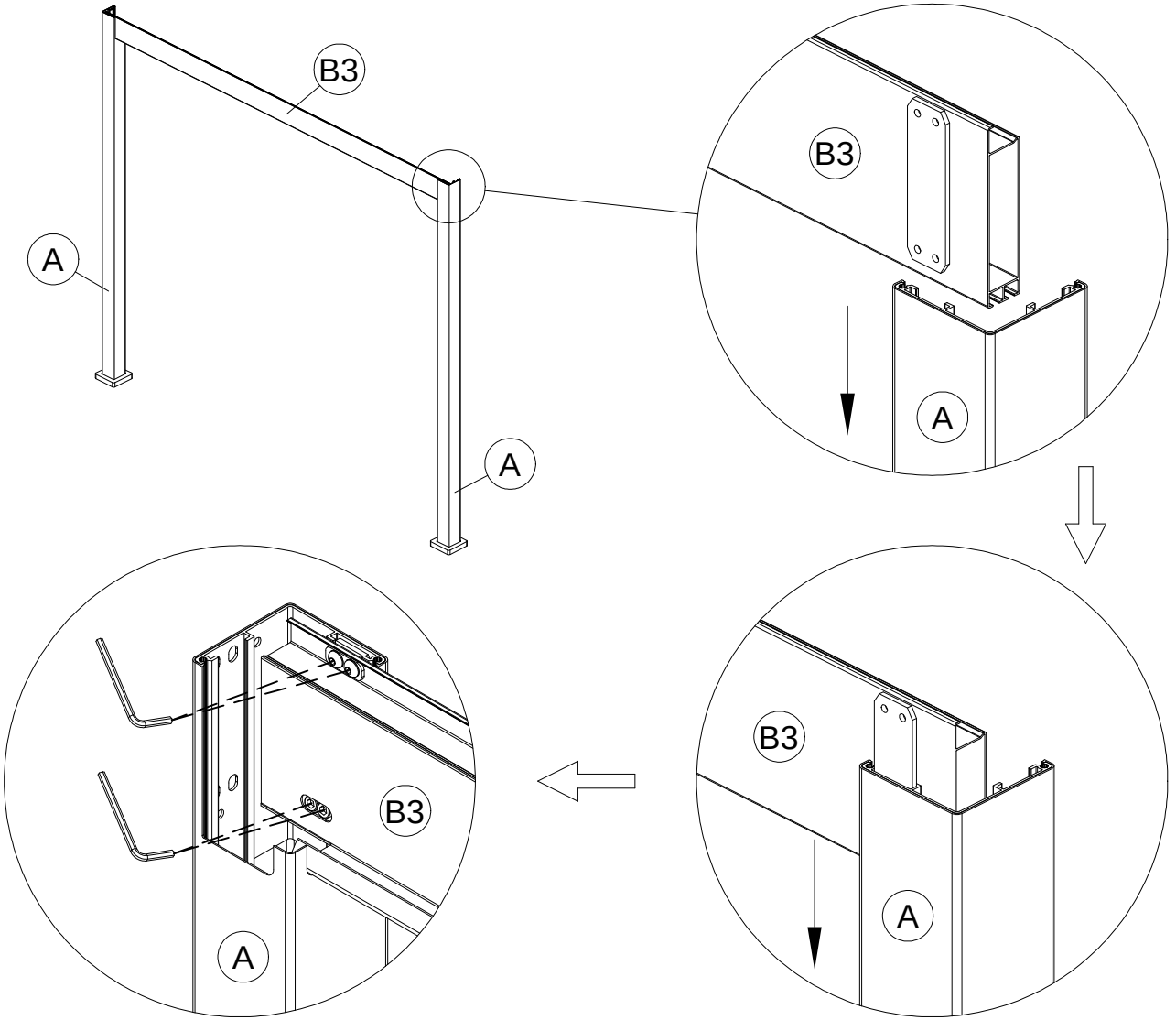

<6>

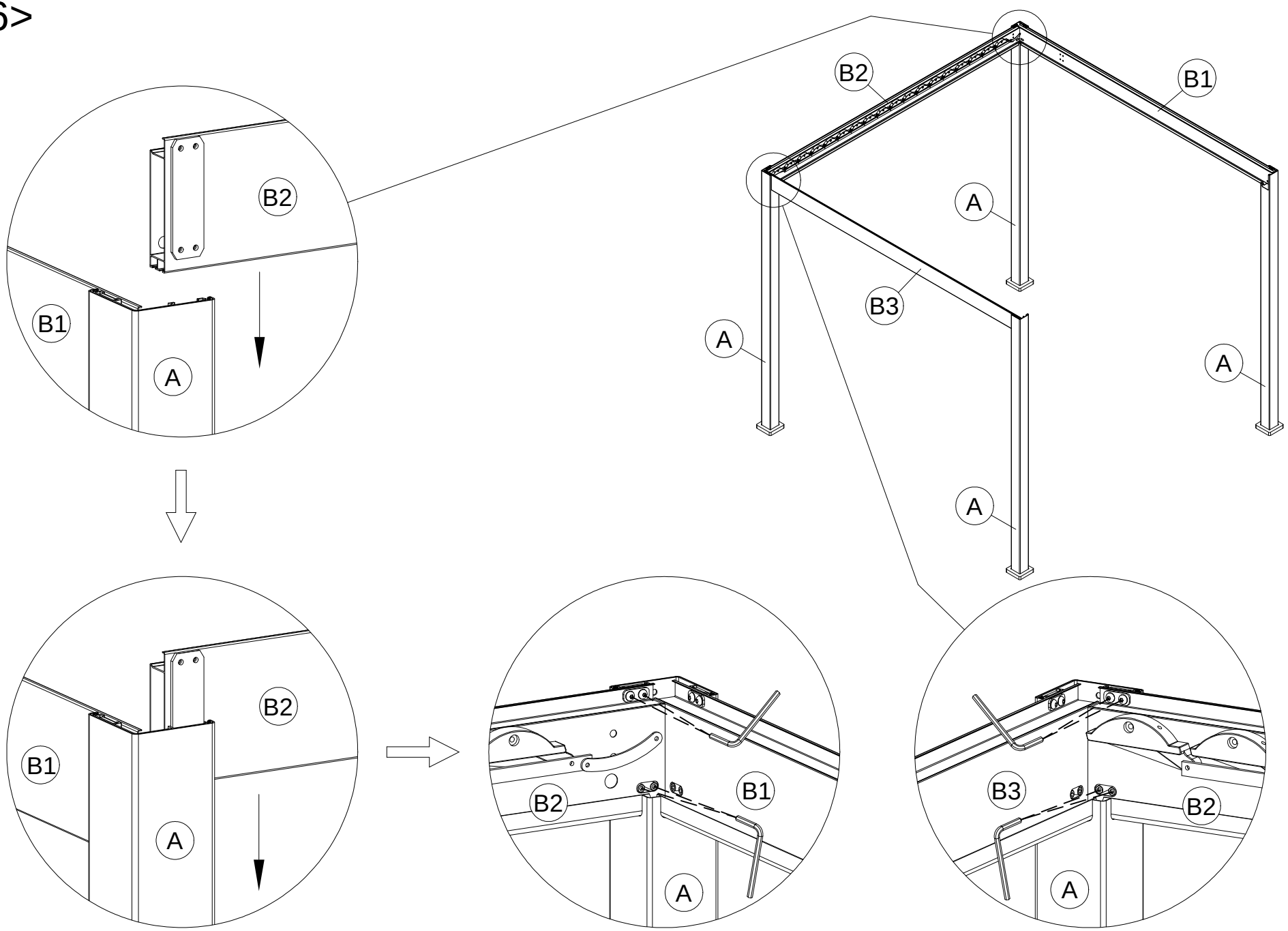

<7>

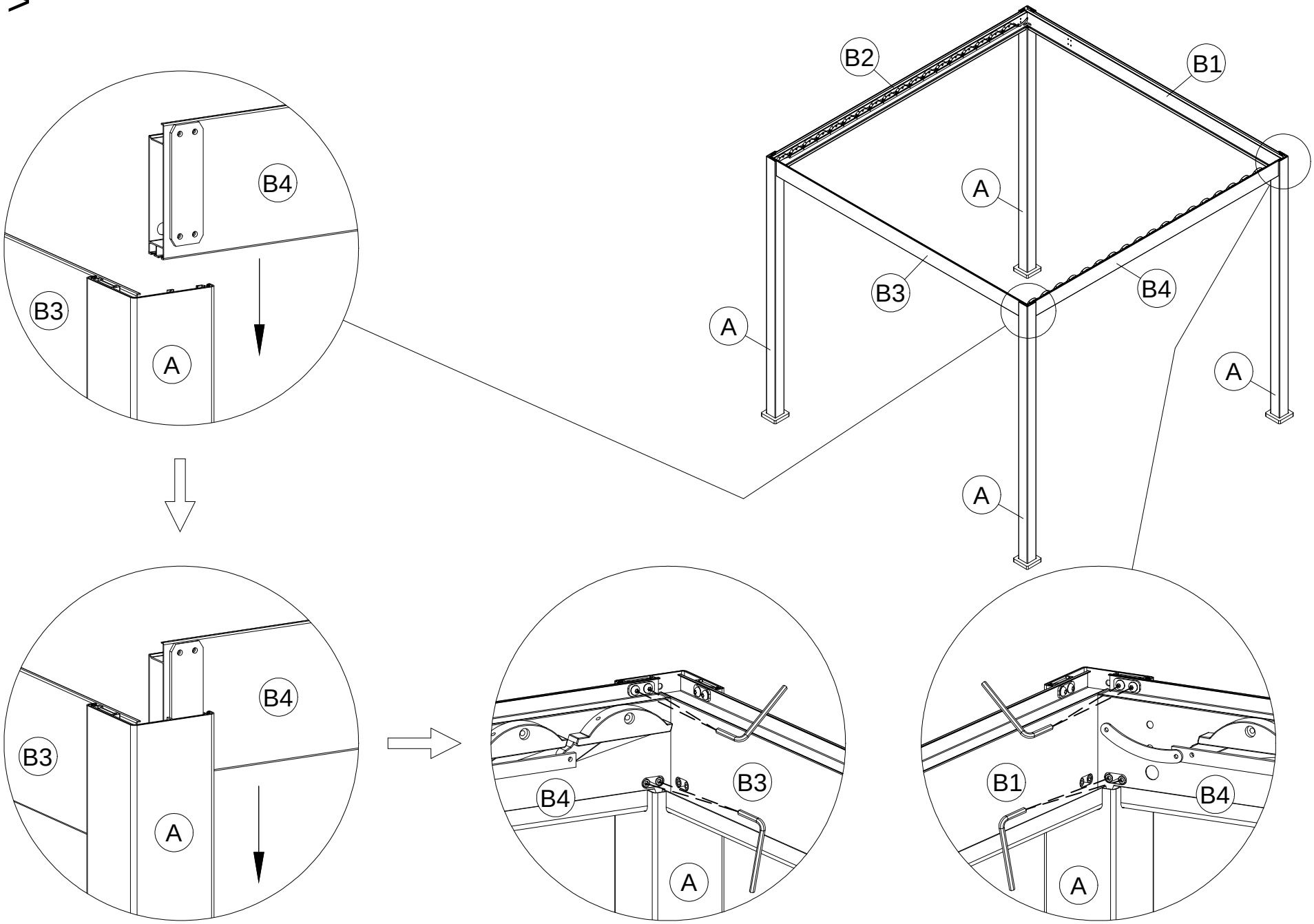

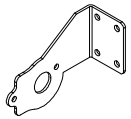 W x1	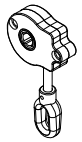 M x1	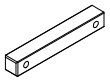 M1 x1	 M6x30 2 x2

<8>

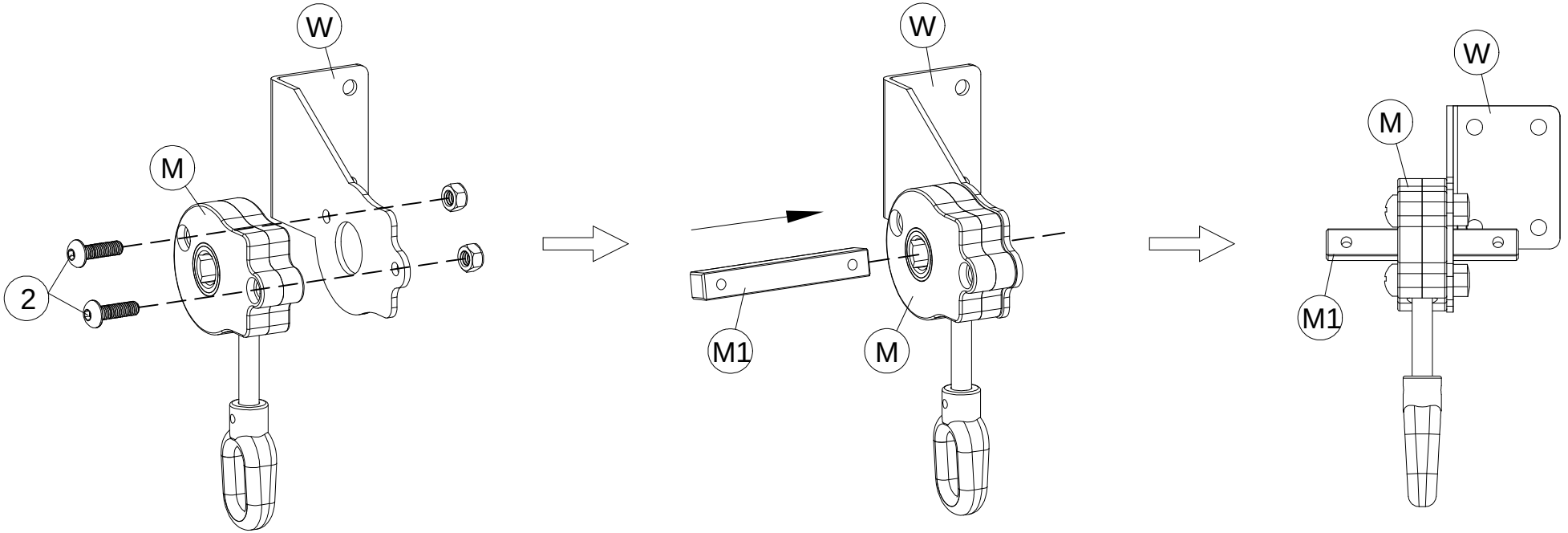

 F1 x1	 F x1	 V1 x1	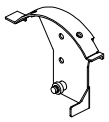 V2 x1	 M5x10 3 x2

<9>

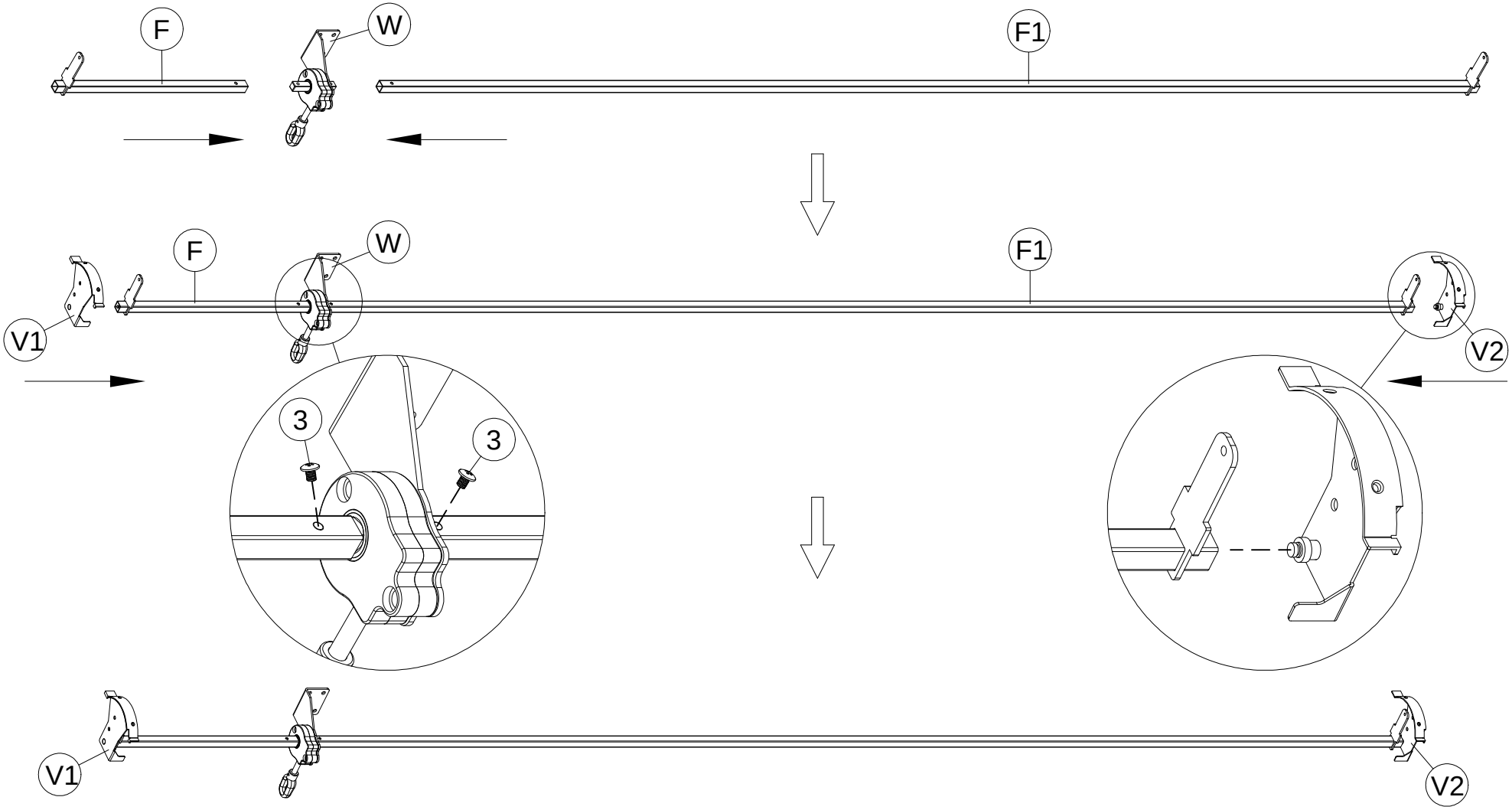

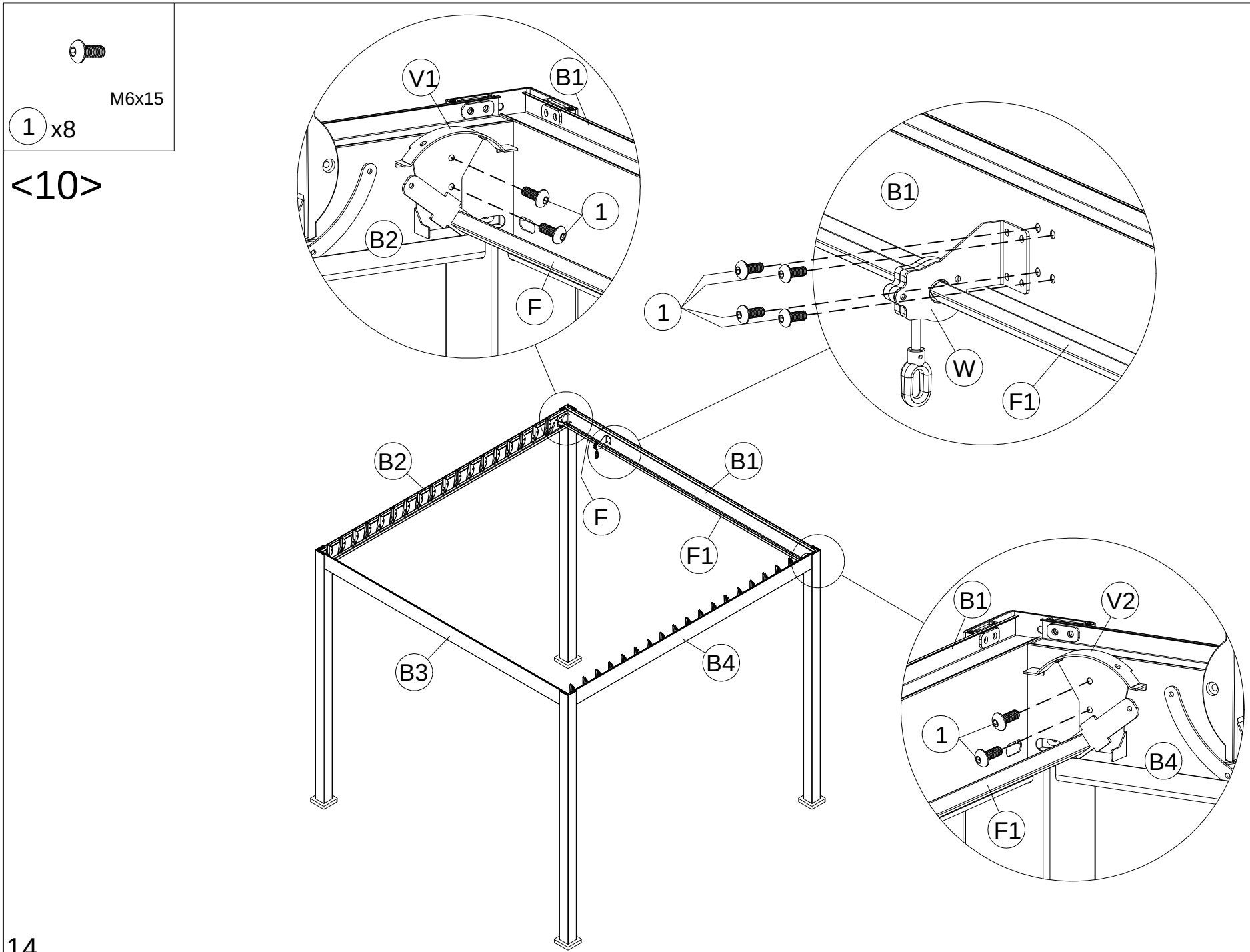
M6x15
1 x8
<10>
V1
B1
1
B2
F
B1
1
W
F1
B2
B1
F
F1
B3
B4
B1
V2
1
B4
F1

M5x15

5 x2

<11>

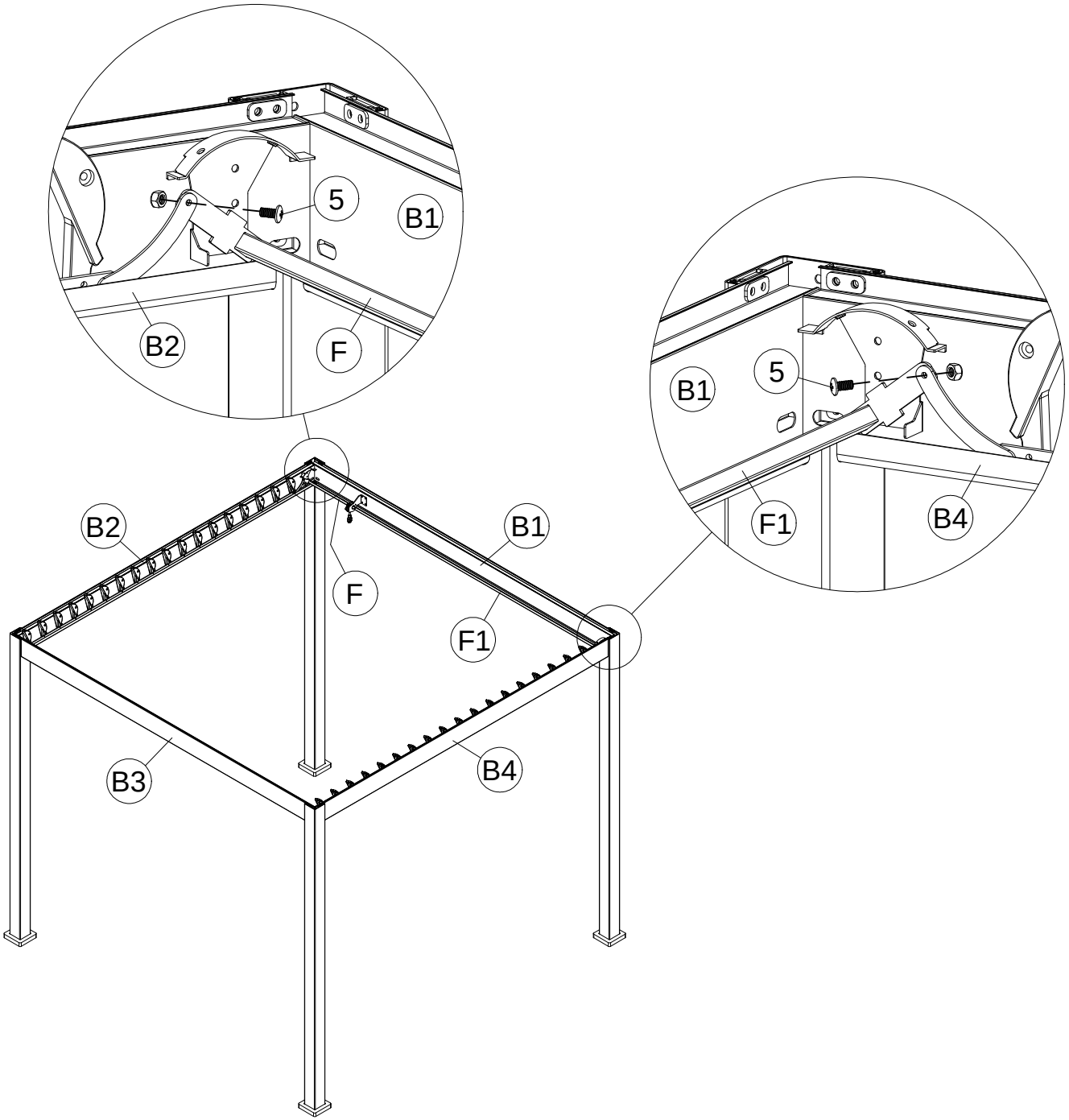



L x1

<12>

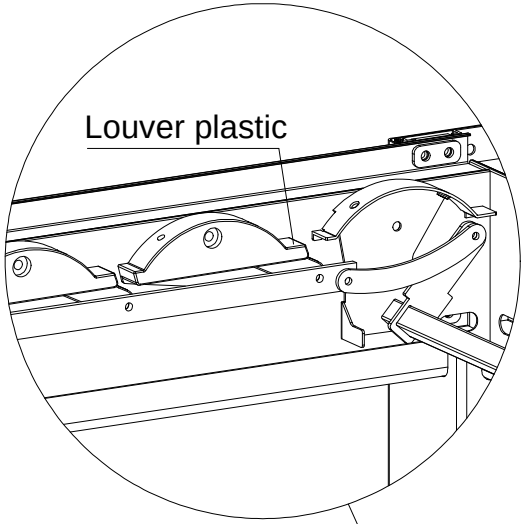

Tips: Twirl the " L " to make the louver plastic flat.

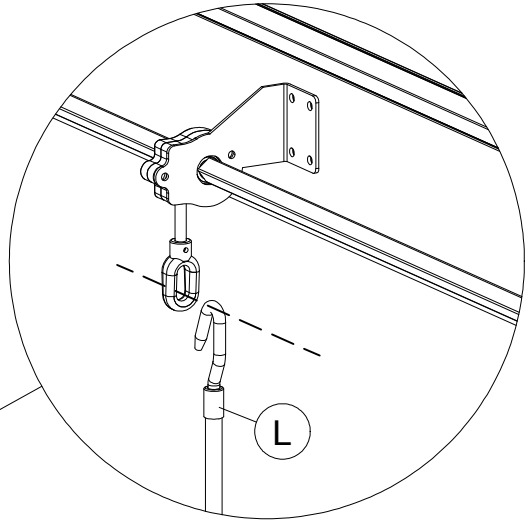

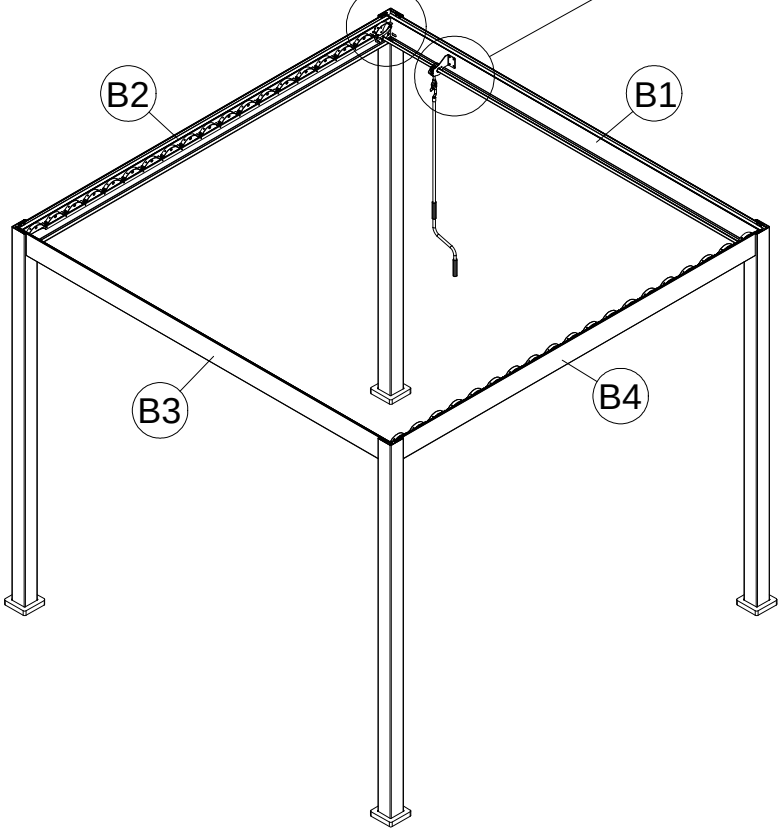

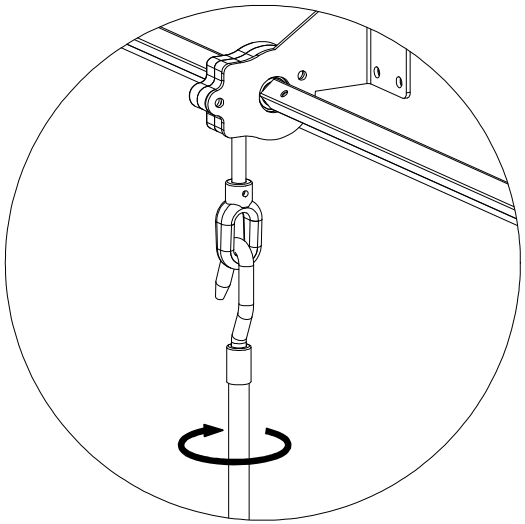

		
Q x18	Q1 x1	M5x10 3 x76

<13>

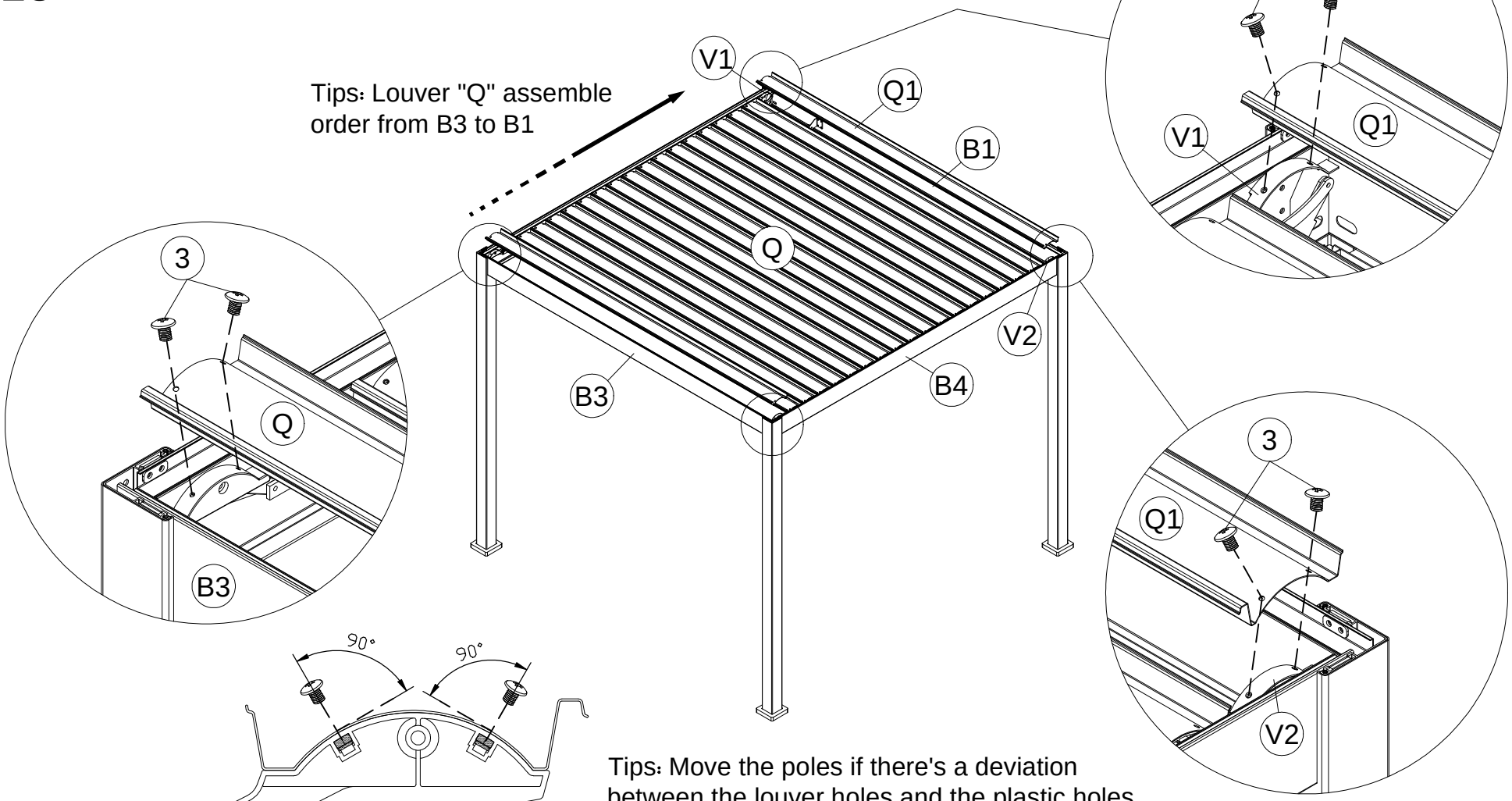

Tips: Move the poles if there's a deviation between the louver holes and the plastic holes.

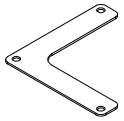 J2 x4	 ST5.5x16 4 x8

<14>

